FASTTRAK

Simple, Strong, Quick & Easy.

ASSEMBLY INSTRUCTIONS - F83 - D

REVISION 06/26

SCAN THIS FOR HOW TO BUILD VIDEO.

Outside base frame dimensions: W2800mm x D1070mm x H1800mm

BEFORE COMMENCING SHED ASSEMBLY, CHECK ALL PARTS.
IF THERE IS A DISCREPANCY, PLEASE CALL STEEL SHEDS AUSTRALIA (SEE REAR OF INSTRUCTION BOOK).

DO NOT ASSEMBLE IN WINDY CONDITIONS	READ INSTRUCTIONS FIRST	2 PERSONS ASSEMBLY

THE MANUFACTURERS CANNOT BE HELD RESPONSIBLE FOR ANY CONSEQUENCES DUE TO SHEDS THAT ARE NOT INSTALLED PER INSTRUCTIONS OR FOR DAMAGE DUE TO WEATHER CONDITIONS, ACTS OF GOD OR FOR SHEDS THAT ARE LEFT PARTIALLY ASSEMBLED OVERNIGHT. PARTS MAY CONTAIN SHARP EDGES & CORNERS. CARE MUST BE TAKEN WHEN HANDLING VARIOUS PIECES TO AVOID A MISHAP, FOR SAFETY SAKE, PLEASE USE A PAIR OF WORK GLOVES, EYE PROTECTION & PROTECTIVE CLOTHING WHEN ASSEMBLING OR PERFORMING ANY MAINTENANCE ON THE BUILDING.

F83-D ASSEMBLY MANUAL

TABLE OF CONTENT

TOOLS REQUIRED 3

HANDY HINTS FOR CONSTRUCTION 3

BRACKETS 4

HARDWARES 4

SHEET IDENTIFICATION 5

SECTIONS 6

FOUNDATION 7

TYPICAL SHEET FIXING DETAILS 8

REAR WALL PANEL 9

FRONT WALL PANEL 10

SIDE WALL SHEET LAYING PROCEDURE 13

STAND AND JOIN WALL PANELS 14

TYPICAL CORNER OVER LAPPING 15

ROOF SHEETING & TRIMS 16

DOOR ASSEMBLY 18

DOOR FITTING 22

ANCHORING SHED TO SLAB 23

BRACKET FIXING TO SLAB LAYOU 23

CARE AND MAINTENANCE (15 YEARS WARRANTY) 24

NOTES 26

F83-D ASSEMBLY MANUAL

TOOLS REQUIRED

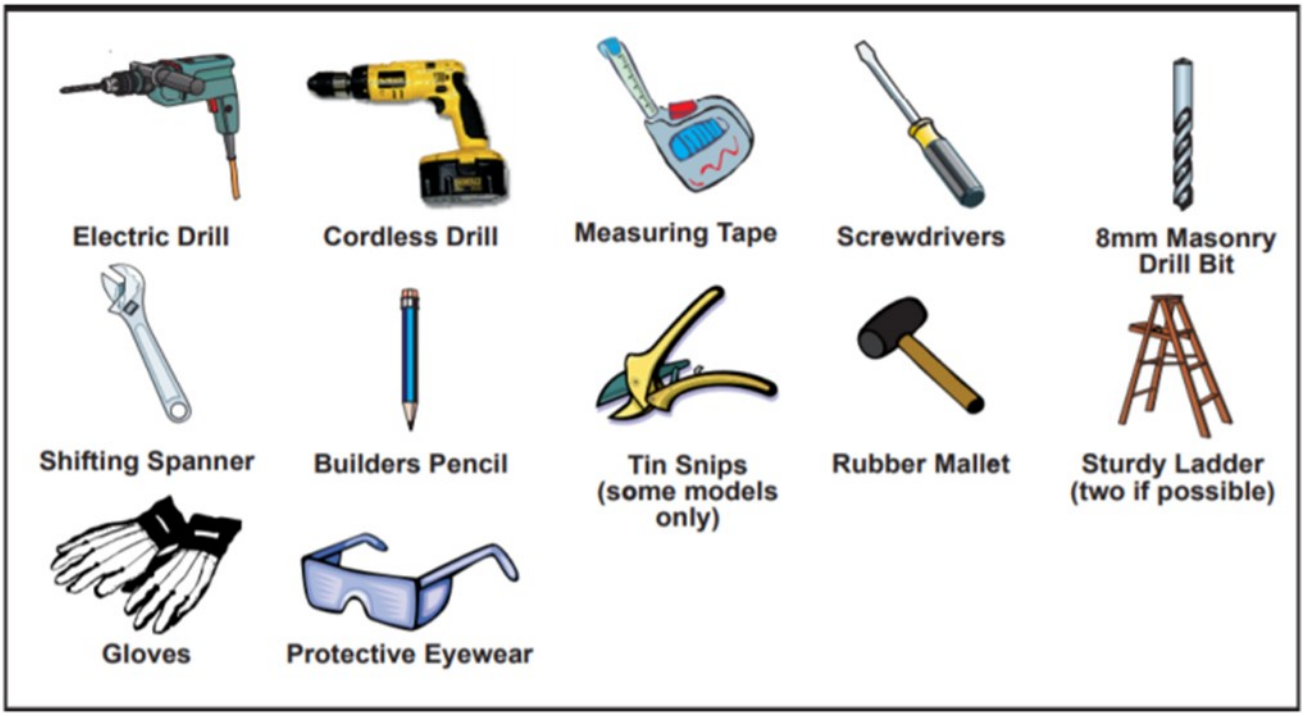

HANDY HINTS FOR CONSTRUCTION

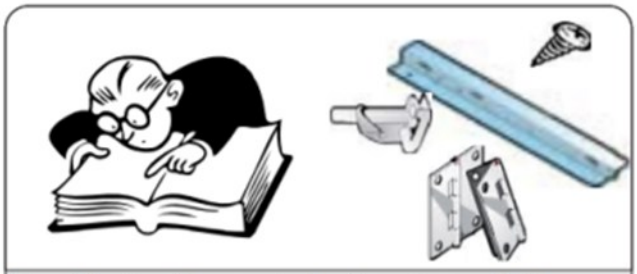

Read instructions and check parts carefully before assembling the shed.

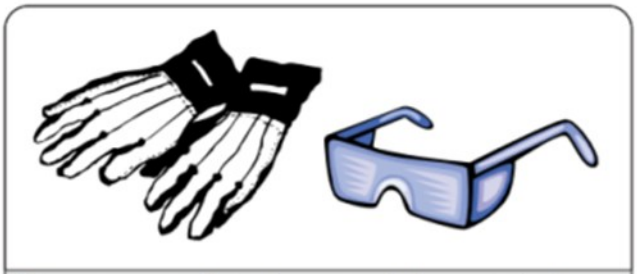

Please wear safety gloves and glasses at all times to protect against sharp metal edges.

Do not assemble in windy conditions as panels may be difficult to handle and damage may result.

Do not back fill against the shed as this will result in corrosion. Allow drainage from the site.

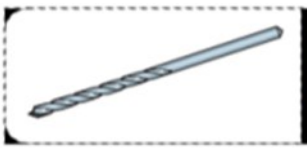

MOST PILOT HOLES ARE PRE-PUNCHED AND IN THIS CASE DRILLING HOLES IS NOT NECESSARY, HOWEVER SOME PILOT HOLES NEED TO BE DRILLED WITH THE INCLUDED 2.5MM DRILL BIT WHERE INDICATED

F83-D ASSEMBLY MANUAL

BRACKETS

CORNER BRACKET X 4	
HINGES X 4	
PADBOLT & KEEPER X 3	
DOOR PLATE X 1	

CORNER CAP X 4	
55mm BRACKET x 4	

HARDWARES

M8x40 MASONRY ANCHOR X 8	
SELF TAPPING SCREW X 250	
2.5mm DRILL BIT X 1	
NUT & BOLT 3/16" x 8	

PLASTIC WASHER & SCREW CAP SHEET x 1	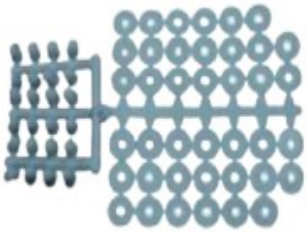
PHILIPS HEAD DRIVE BIT x 1	
CLIP NUT x 3	

F83-D ASSEMBLY MANUAL

SHEET IDENTIFICATION

SHEET IDENTIFICATION	C
DESCRIPTION	WALL PANEL
LENGTH "X"	1800mm
QTY	14

SHEET IDENTIFICATION	D
DESCRIPTION	WALL CORNER PANEL
LENGTH "X"	1800mm
QTY	4

SHEET IDENTIFICATION	E
DESCRIPTION	ROOF PANEL
LENGTH "X"	1149mm
QTY	8

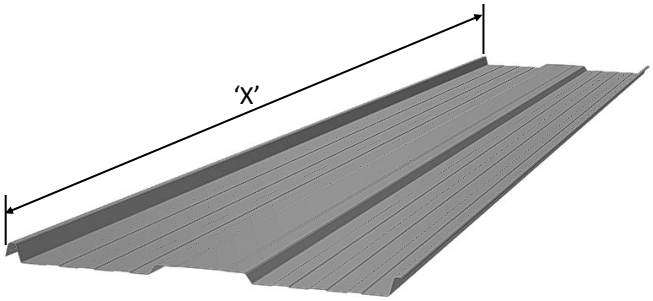

NB: F Door panels come partially Slit

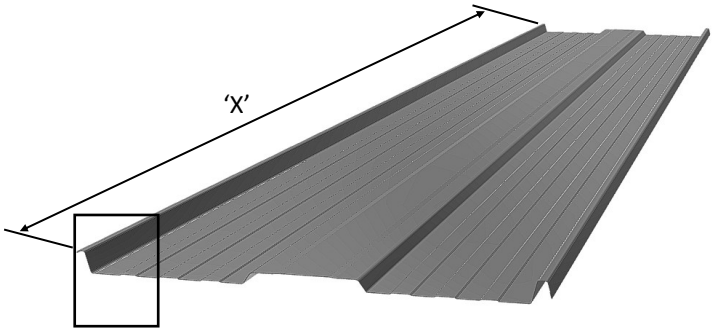

SHEET IDENTIFICATION	F
DESCRIPTION	DOOR PANEL SIDE (PARTIALLY SLIT)
LENGTH "X"	1738
QTY	4

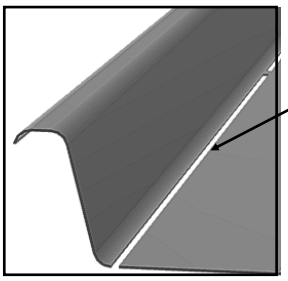

SPLIT CUT ALONG SHEET LENGTH —SMALL RIB SIDE

F83-D ASSEMBLY MANUAL

SECTIONS

CHANNEL	H
DESCRIPTION	DOOR FRAME TOP / BOTTOM
OVERALL LENGTH	674mm
QTY	4

CHANNEL	I
DESCRIPTION	DOOR FRAME SIDE
OVERALL LENGTH	1742mm
QTY	4

CHANNEL	J
DESCRIPTION	DOOR BOXING
OVERALL LENGTH	1706mm
QTY	4

CHANNEL	K
DESCRIPTION	DOOR BRACING
OVERALL LENGTH	1040mm
QTY	4

CHANNEL	L
DESCRIPTION	DOOR SEAL
OVERALL LENGTH	1706mm
QTY	1

CHANNEL	M
DESCRIPTION	TOP/BOTTOM — FRONT / REAR
OVERALL LENGTH	2791mm (1461 + 1460)
QTY	4 Sets

CHANNEL	N
DESCRIPTION	SIDE CHANNEL GABLE BOTTOM
OVERALL LENGTH	1061mm
QTY	4

CHANNEL	Q
DESCRIPTION	DOOR JAMB CHANNEL
OVERALL LENGTH	1800mm
QTY	2

CHANNEL	R
DESCRIPTION	BOTTOM DOOR SPACER CHANNEL
OVERALL LENGTH	1367mm
QTY	1

CHANNEL	S
DESCRIPTION	TOP DOOR SPACER CHANNEL
OVERALL LENGTH	1367mm
QTY	1

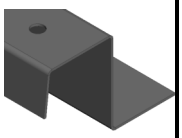

CHANNEL	V
DESCRIPTION	GUTTER TRIM
OVERALL LENGTH	1404mm
QTY	2

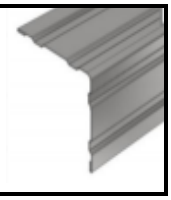

CHANNEL	V
DESCRIPTION	GUTTER TRIM
OVERALL LENGTH	1750mm
QTY	2

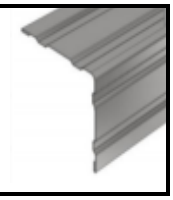

CHANNEL	W
DESCRIPTION	ROOF ANGLE TRIM
OVERALL LENGTH	11415mm
QTY	2

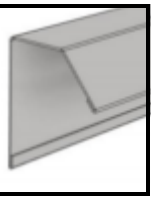

F83-D ASSEMBLY MANUAL

FOUNDATION

RECOMMENDED SLAB REBATE DETAILS

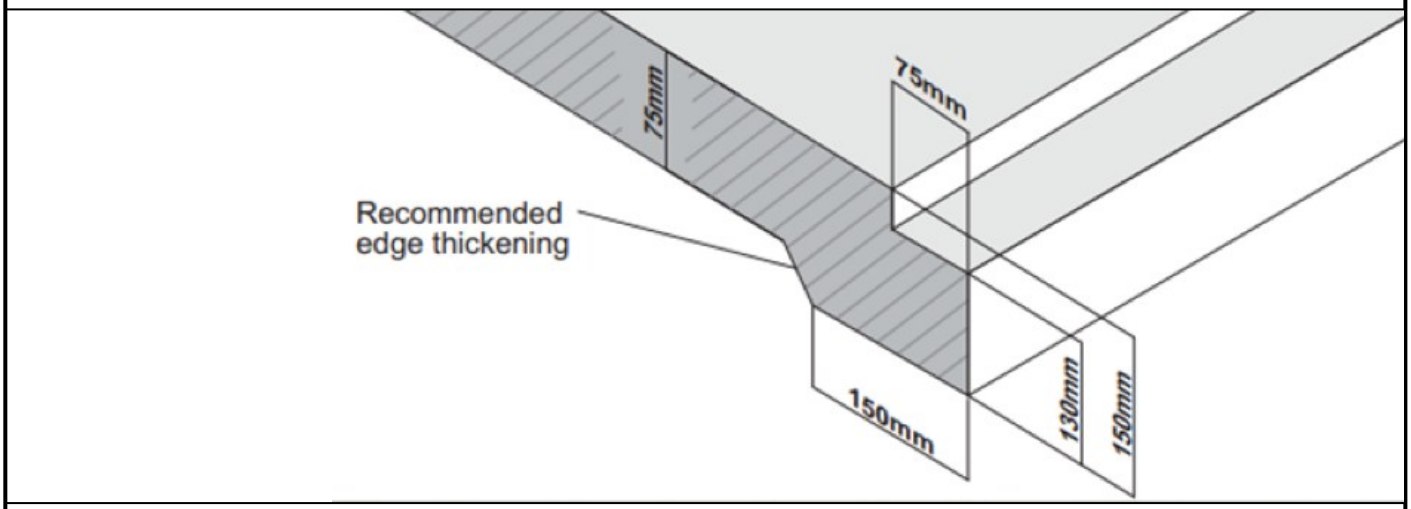

Recommended slab rebate detail

Although not required, it is strongly recommended that, to avoid water leakage around the base of your shed, a rebate be cast into the slab. This will allow the shed to sit below the slab level and prevent water from reaching the upper level of the slab.

If you planning a rebated slab make sure to cut the 4 corners at 60 x 45 degree as shown in detail below

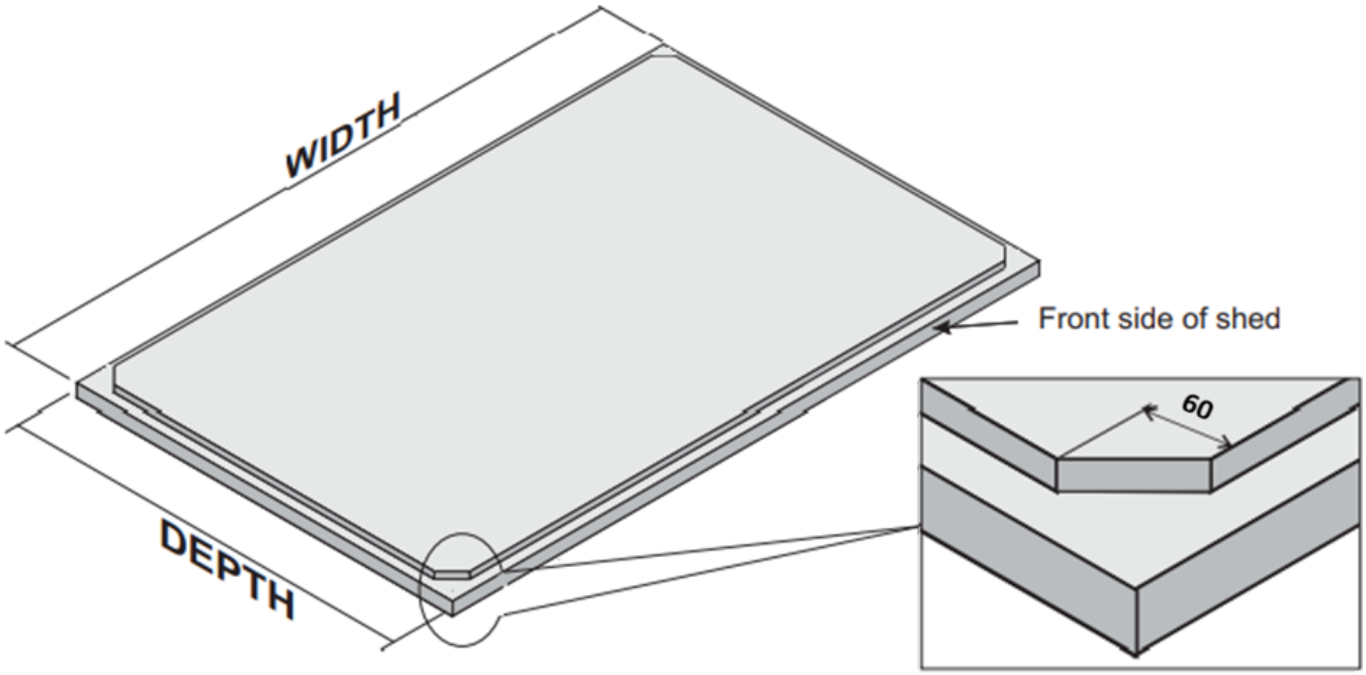

Slab Details Your garden shed must be erected on a solid, level and square foundation. We strongly recommend you pour a concrete slab 75mm thick, reinforced with SL62 mesh (minimum) using dimensions from the table below.

SHED CODE	OUTER SLAB DESIGN (WIDTH x DEPTH)	ANCHORS M8 x 40mm
F83-D	2900mm x 1170mm	8

F83-D ASSEMBLY MANUAL

TYPICAL SHEET FIXING DETAILS

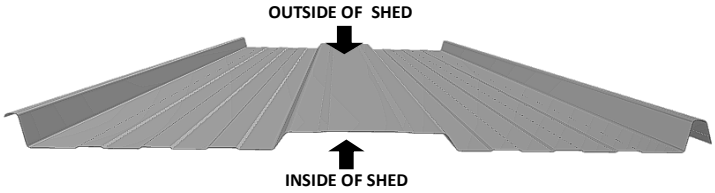

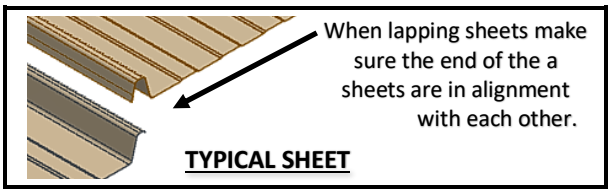

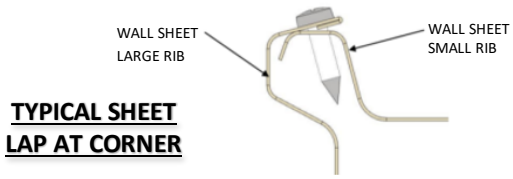

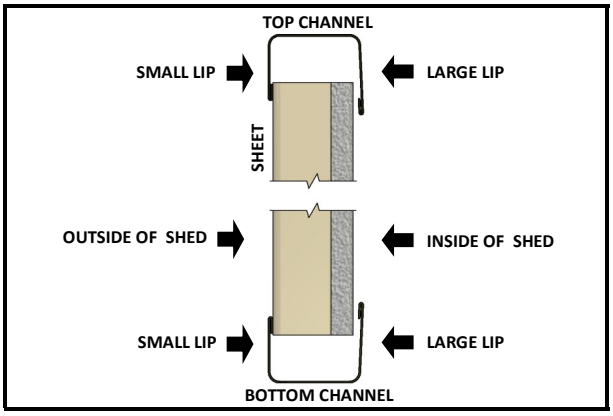

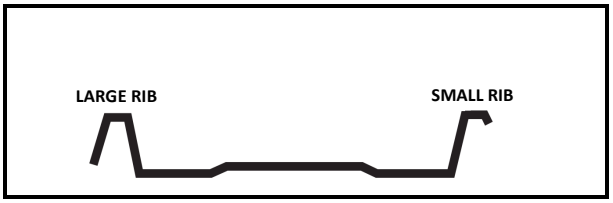

On a clean and uninterrupted work area, we recommend lay suitable wood lengths or work trestles to support the panels off the ground. **DO NOT PUT ANY WEIGHT ON THE SHEETS BETWEEN THE WOOD LENGTHS AS THIS WILL DAMAGE THE SHEETING.**

Locate the required panels and assemble them as shown above. Lay the next sheet on top of the first one making sure the LARGE RIB covers the SMALL RIB. Lightly tap the bottom of the sheet to make the bottom edge in alignment if required.

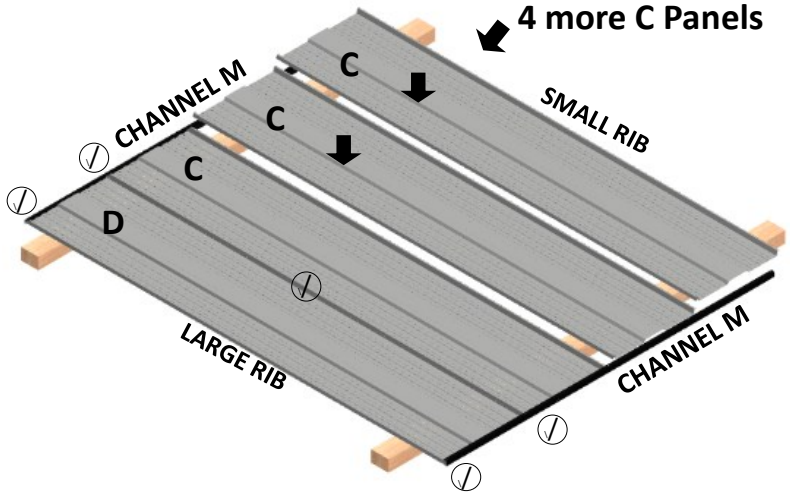

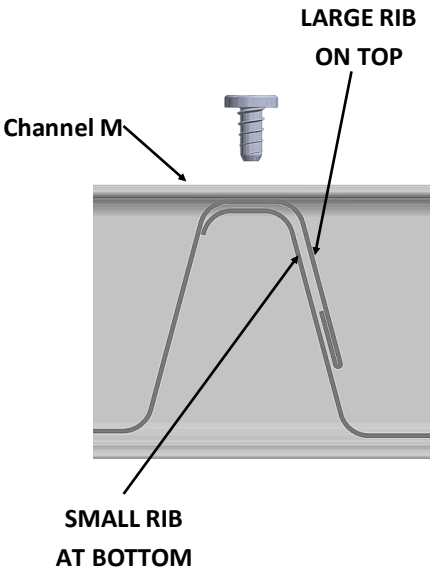

Screw here.

F83-D ASSEMBLY MANUAL

REAR WALL PANEL

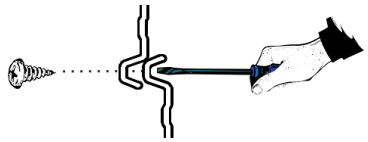

If you are having trouble screwing the channel to the sheets, chock behind the hole .

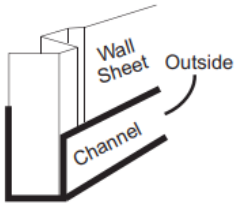

Ensure that the small lip of the channel is to the outside of the shed.

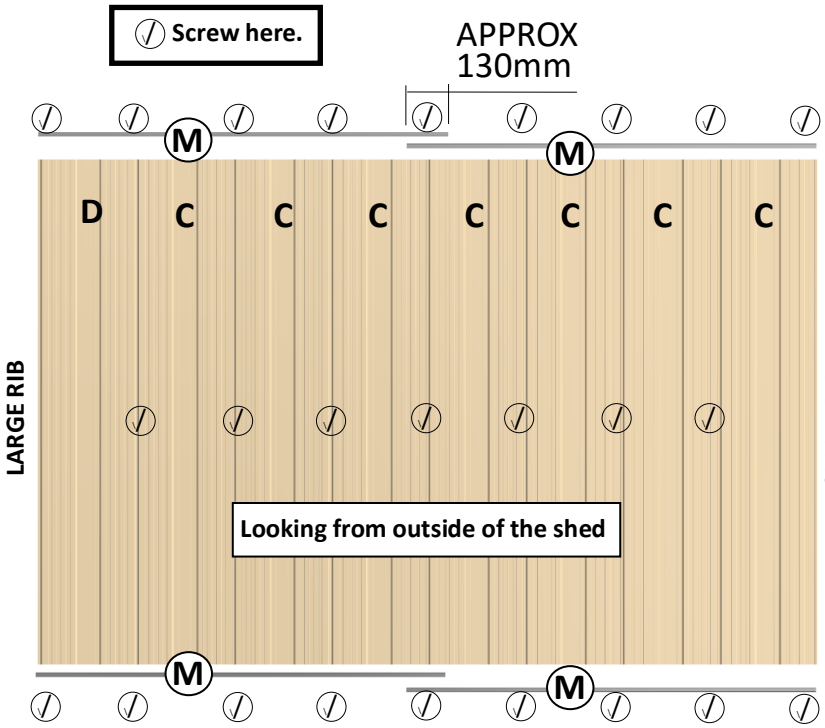

Fit the top and bottom channel to the wall panels. Ensure the channel is flush with the edge of the sheets.

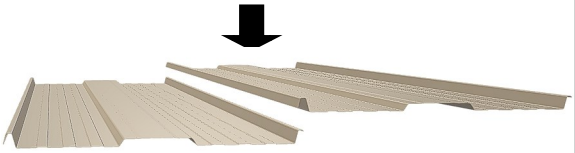

Lay the wall panels (large rib overlapping the small rib).

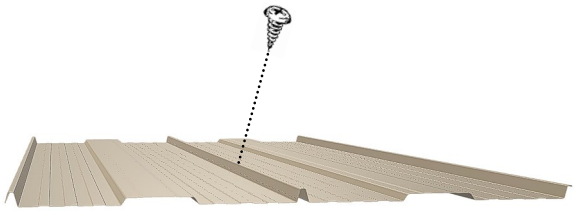

Screw the wall panels at centre of the rib as shown.

Channel ends are orientated to the outer edges of the panel

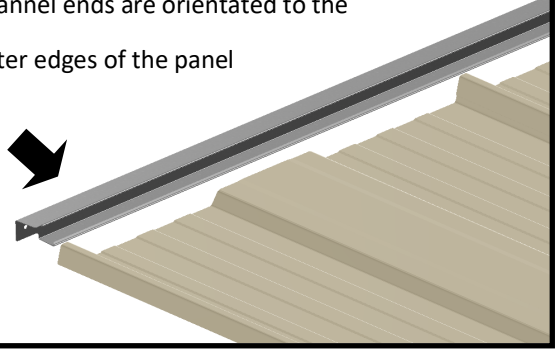

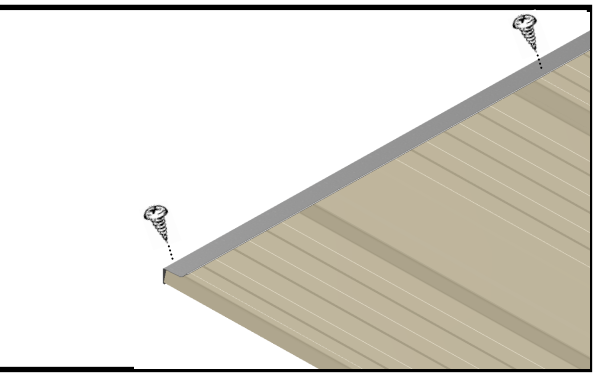

NB: Some channel holes may not align perfectly when the sheets are laid out.
They can be easily manipulated into position and screw to the channel.

F83-D ASSEMBLY MANUAL

FRONT WALL PANEL

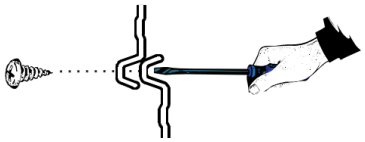

If you are having trouble screwing the channel to the sheets, chock behind the hole .

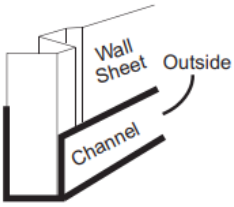

Ensure that the small lip of the channel is to the outside of the shed.

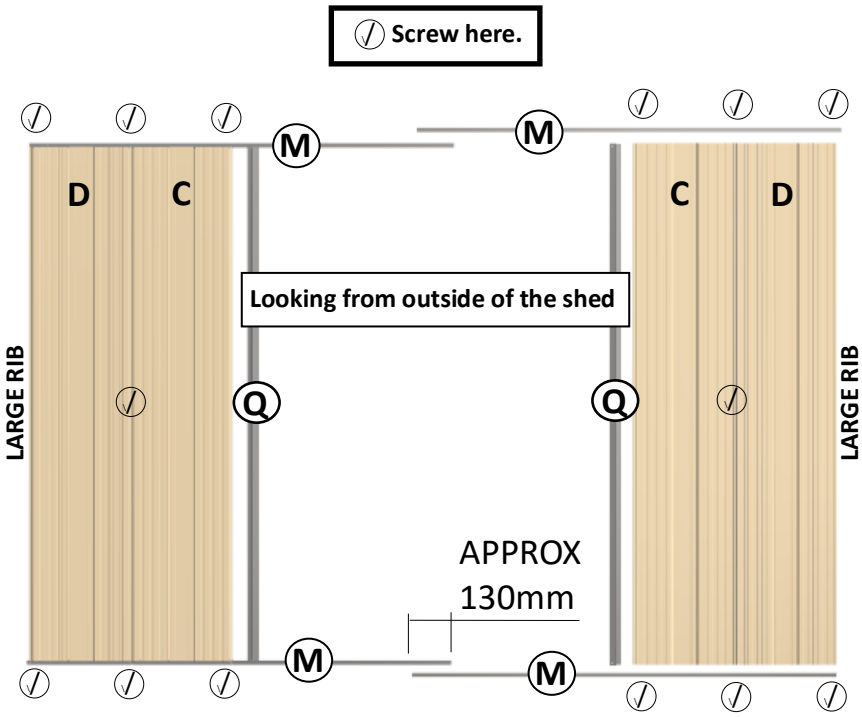

Fit the top and bottom channel to the wall panels. Ensure the channel is flush with the edge of the sheets.

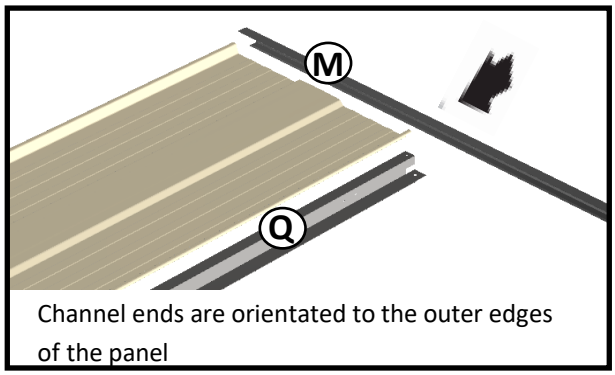

Channel ends are orientated to the outer edges of the panel

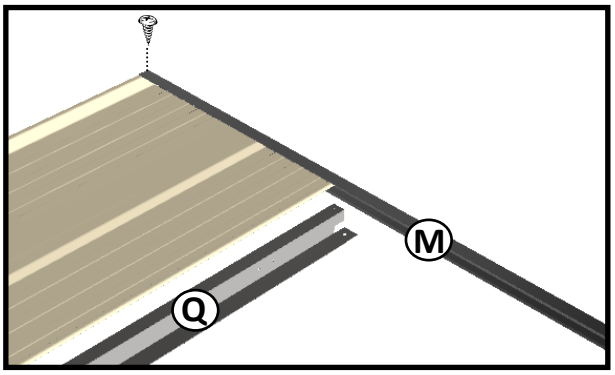

Top and bottom door jamb connection.

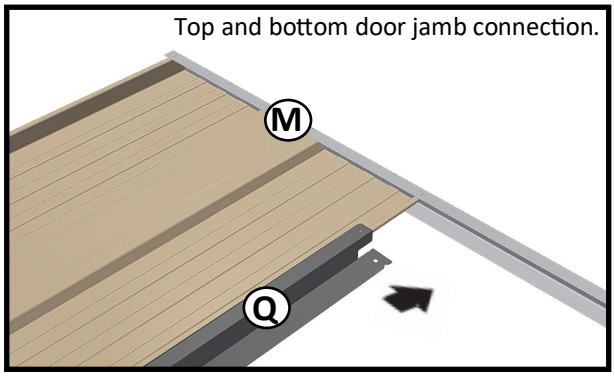

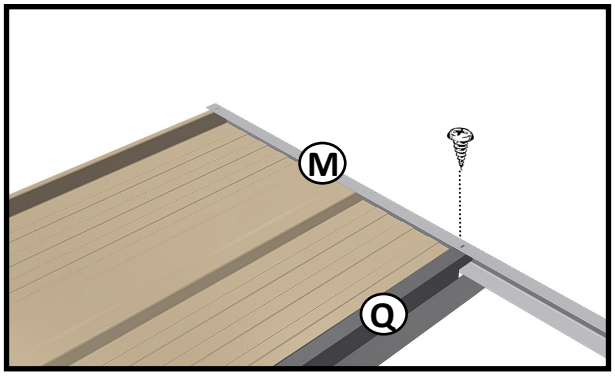

NB: Some channel holes may not align perfectly when the sheets are laid out. They can be easily manipulated into position and screw to the channel.

F83-D ASSEMBLY MANUAL

FRONT WALL PANEL

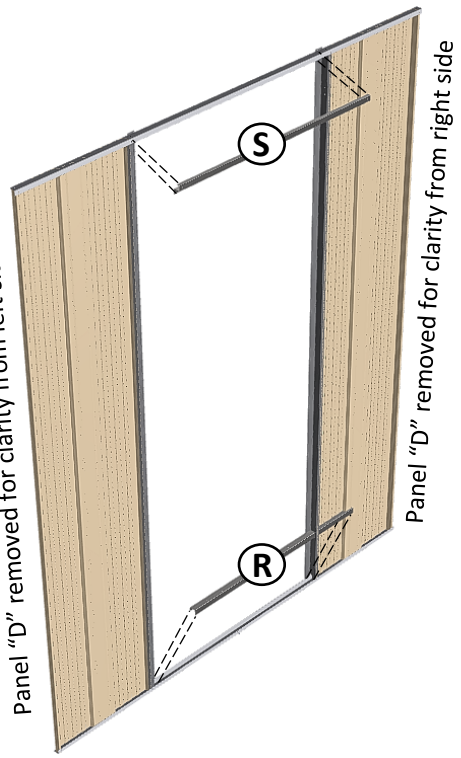

Fit the top door spacer and the bottom door spacer to the front wall panel as shown. Some pilot holes may need to be drilled with the included 2.5mm drill bit

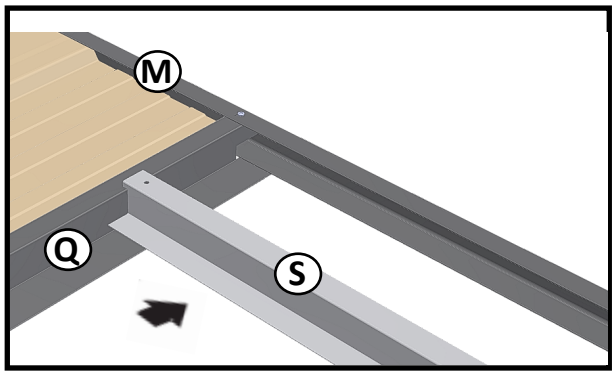

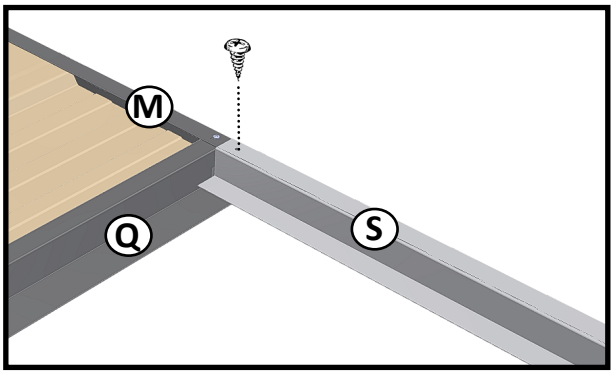

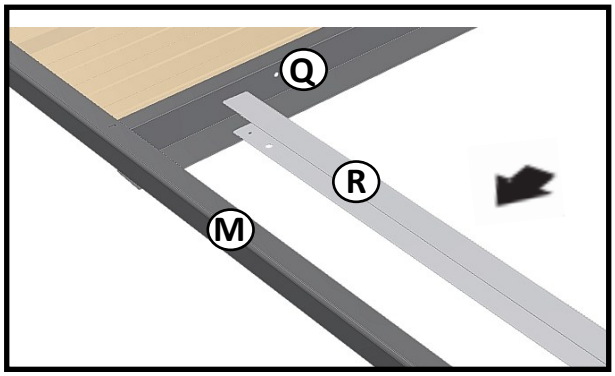

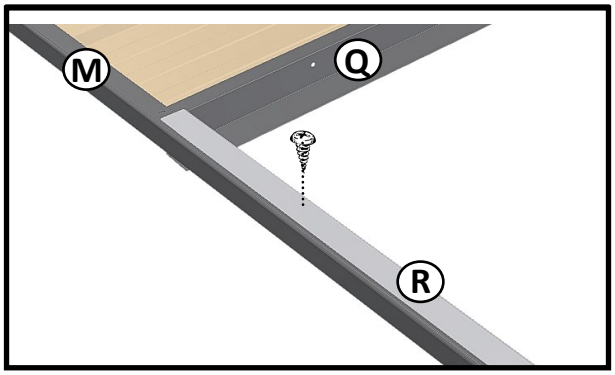

NB: Some channel holes may not align perfectly when the sheets are laid out. They can be easily manipulated into position and screw to the channel.

F83-D ASSEMBLY MANUAL

FRONT WALL PANEL

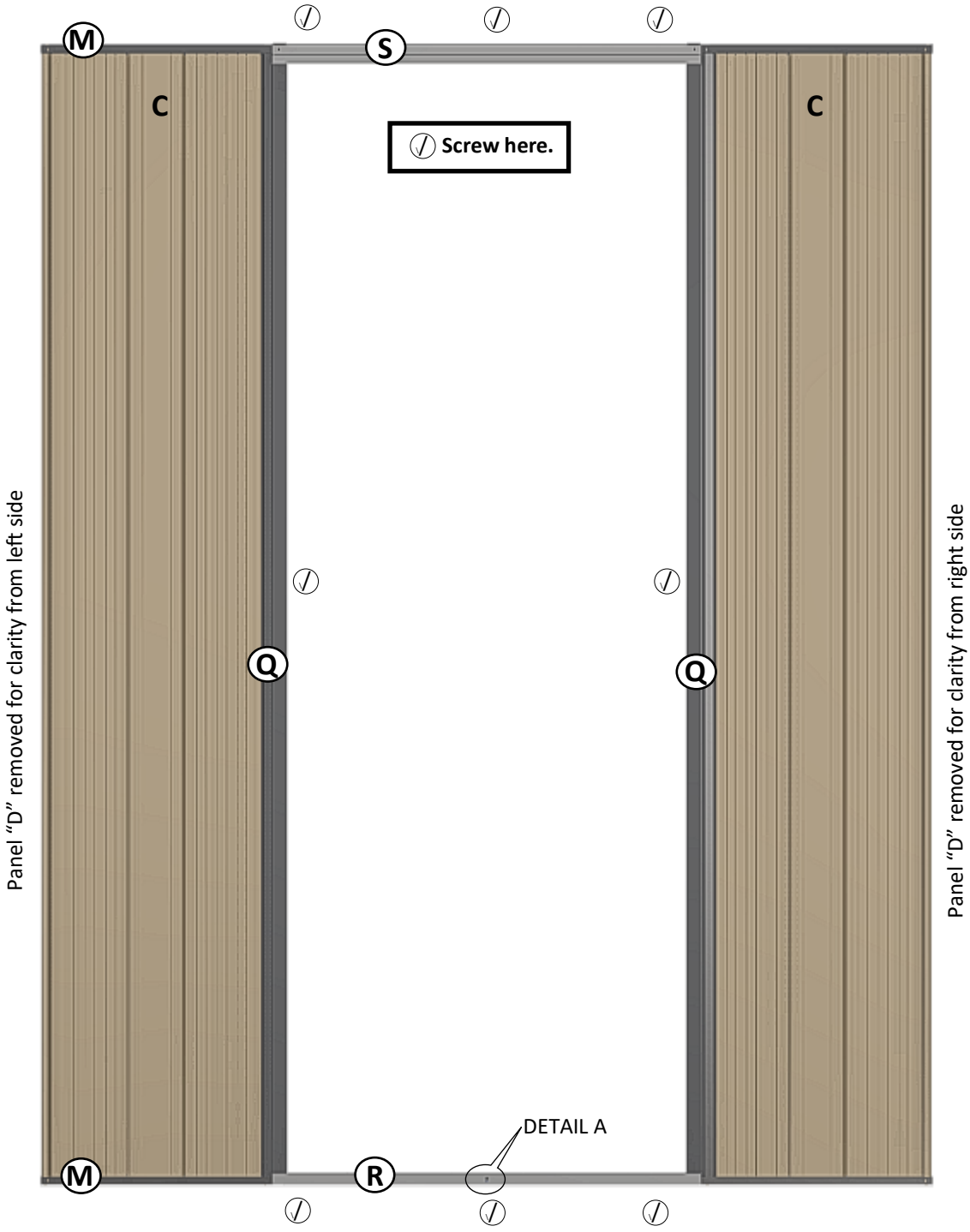

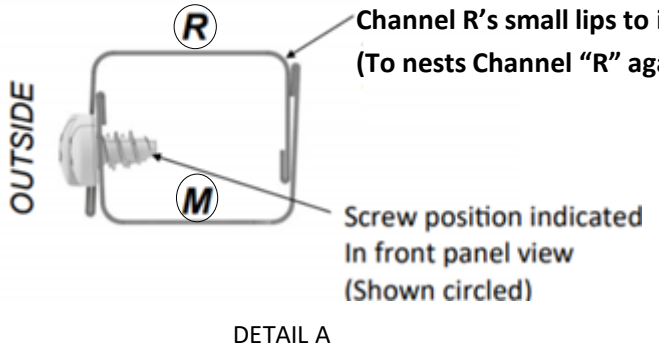

DETAIL A

F83-D ASSEMBLY MANUAL

SIDE WALL SHEET LAYING PROCEDURE

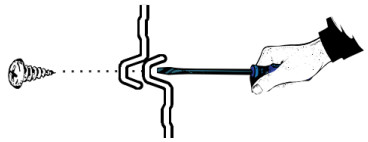

If you are having trouble screwing the channel to the sheets, chock behind the hole .

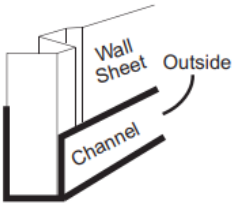

Ensure that the small lip of the channel is to the outside of the shed.

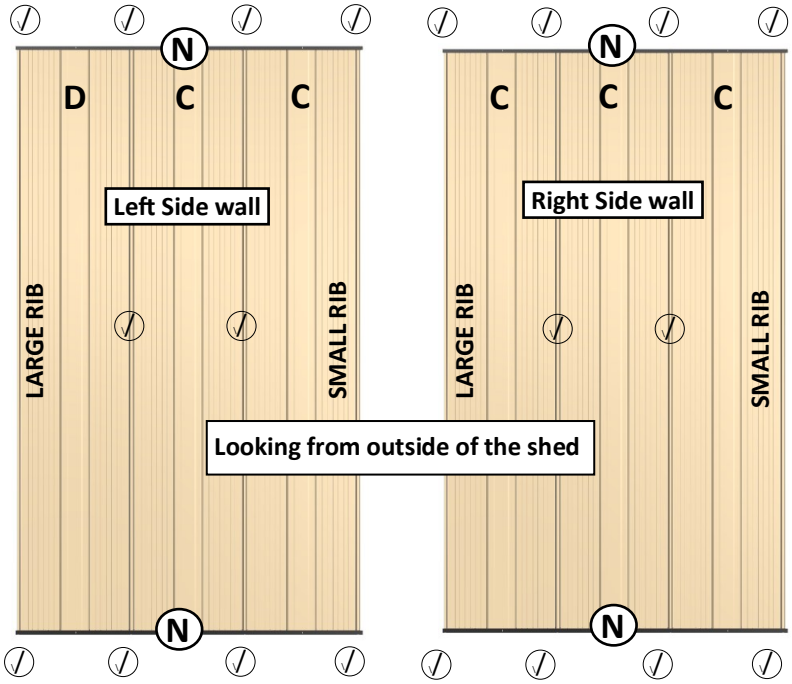

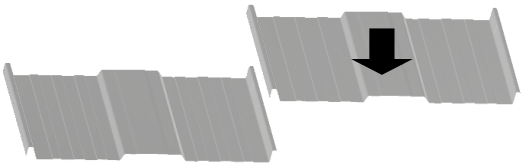

Lay the wall panels out with the large rib overlapping the small.

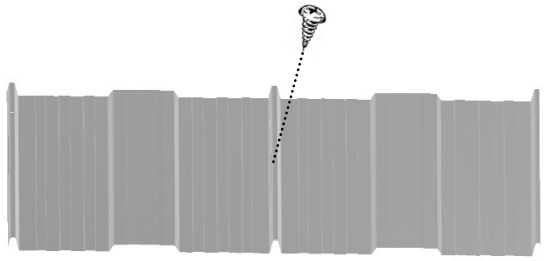

Screw the wall panels at centre of the rib as shown.

Channel ends are orientated to the outer edges of the panel

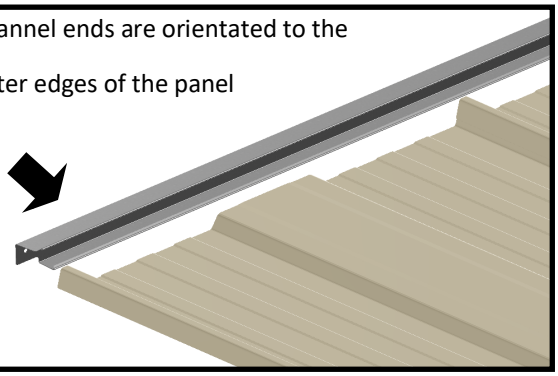

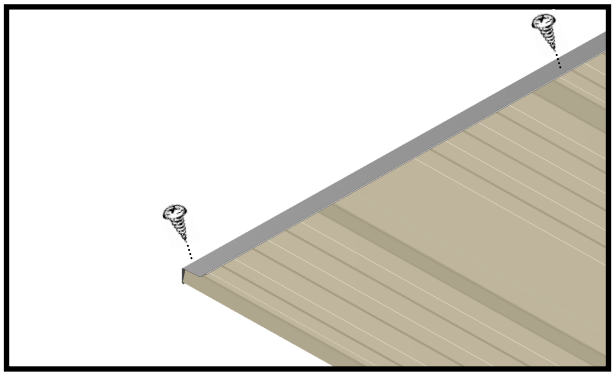

NB: ome channel holes may not align perfectly when the sheets are laid out.
They can be easily manipulated into position and screw to the channel.

F83-D ASSEMBLY MANUAL

STAND AND JOIN WALL PANELS

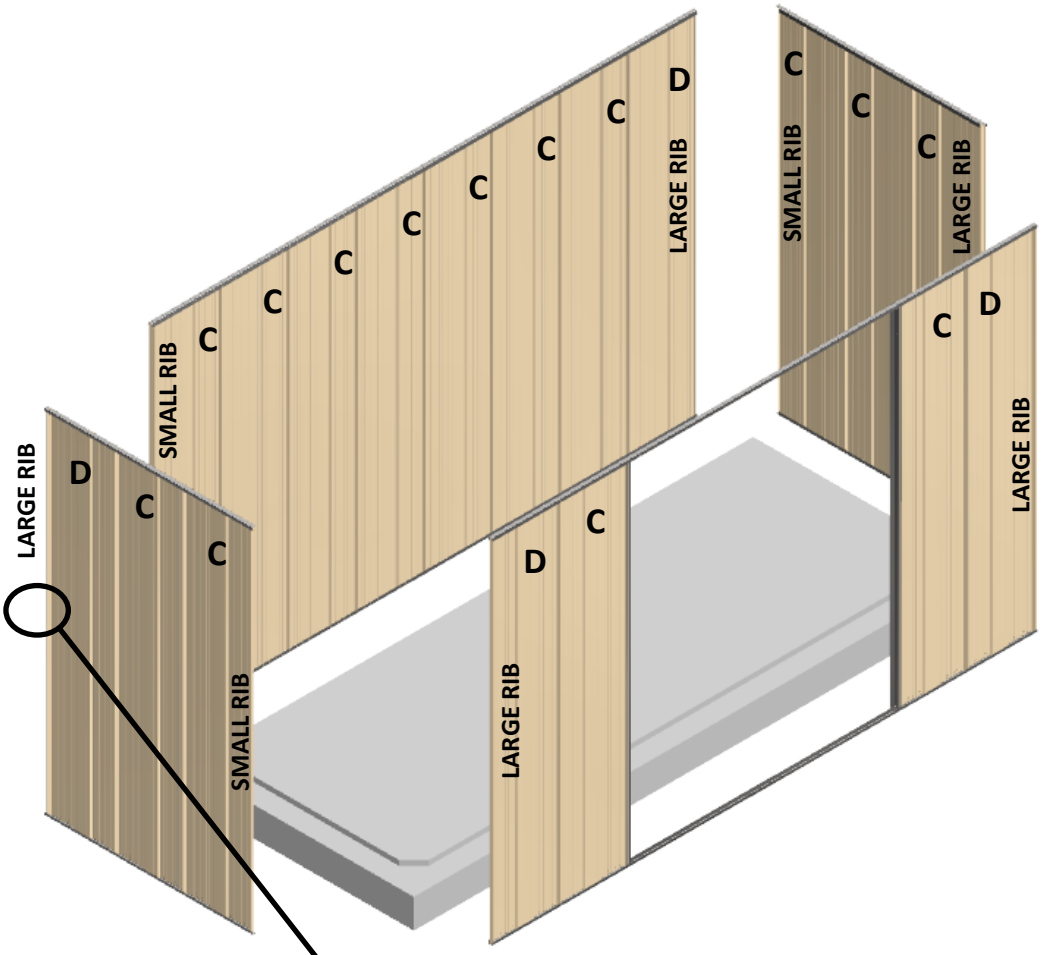

TYPICAL CORNER SCREW FIXING

TOP CORNER

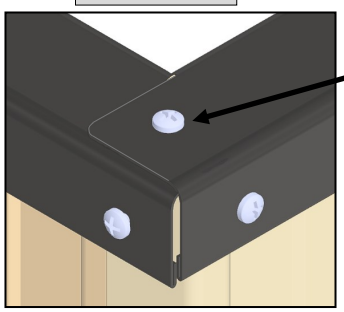

Place channel such a way the large hole on top of small holes.

Overlap sheeting ribs and fix panels as shown.
Use 3 screws to fix both panels.

MID CORNER

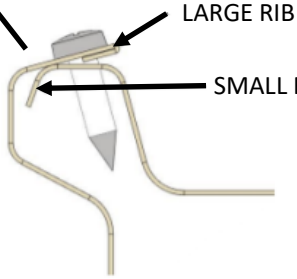

F83-D ASSEMBLY MANUAL

Fix the bottom corners using the corner brackets and screws as shown below. Fix the front panel last. N.B when assembling large wall models, eg. 7 panels width and above, extra care should be taken, with person two providing adequate support to stop the wall from distorting.

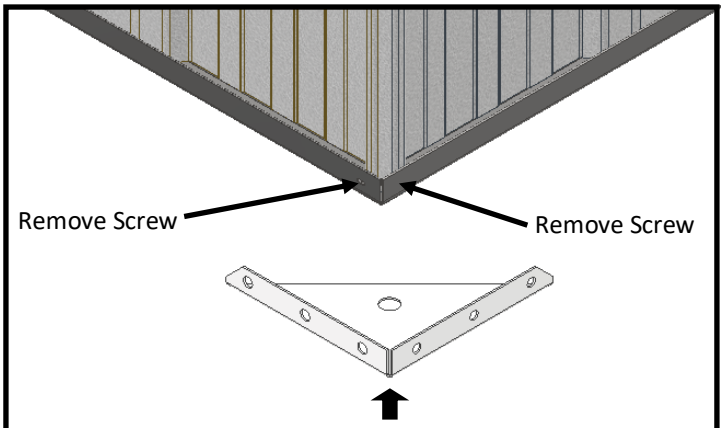

First remove the pre-fixed screws from bottom corner of both panels as marked. Then fix the Corner bracket to the 4 bottom corners

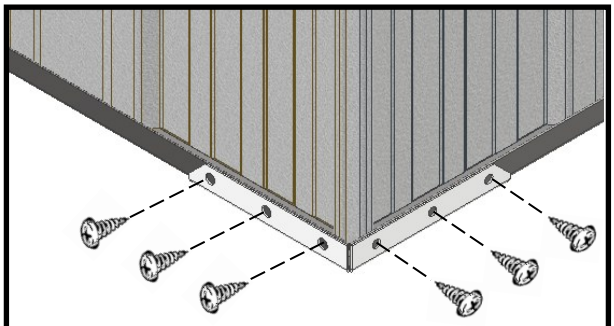

Screw the corner bracket from outside of the shed as shown. Required on all 4 bottom corners

F83-D ASSEMBLY MANUAL

ROOF SHEETING & TRIMS

Picture shown a smaller shed. Procedure is same for the F83

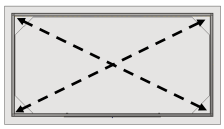

Before fitting the roof sheets

make sure the diagonals are equal

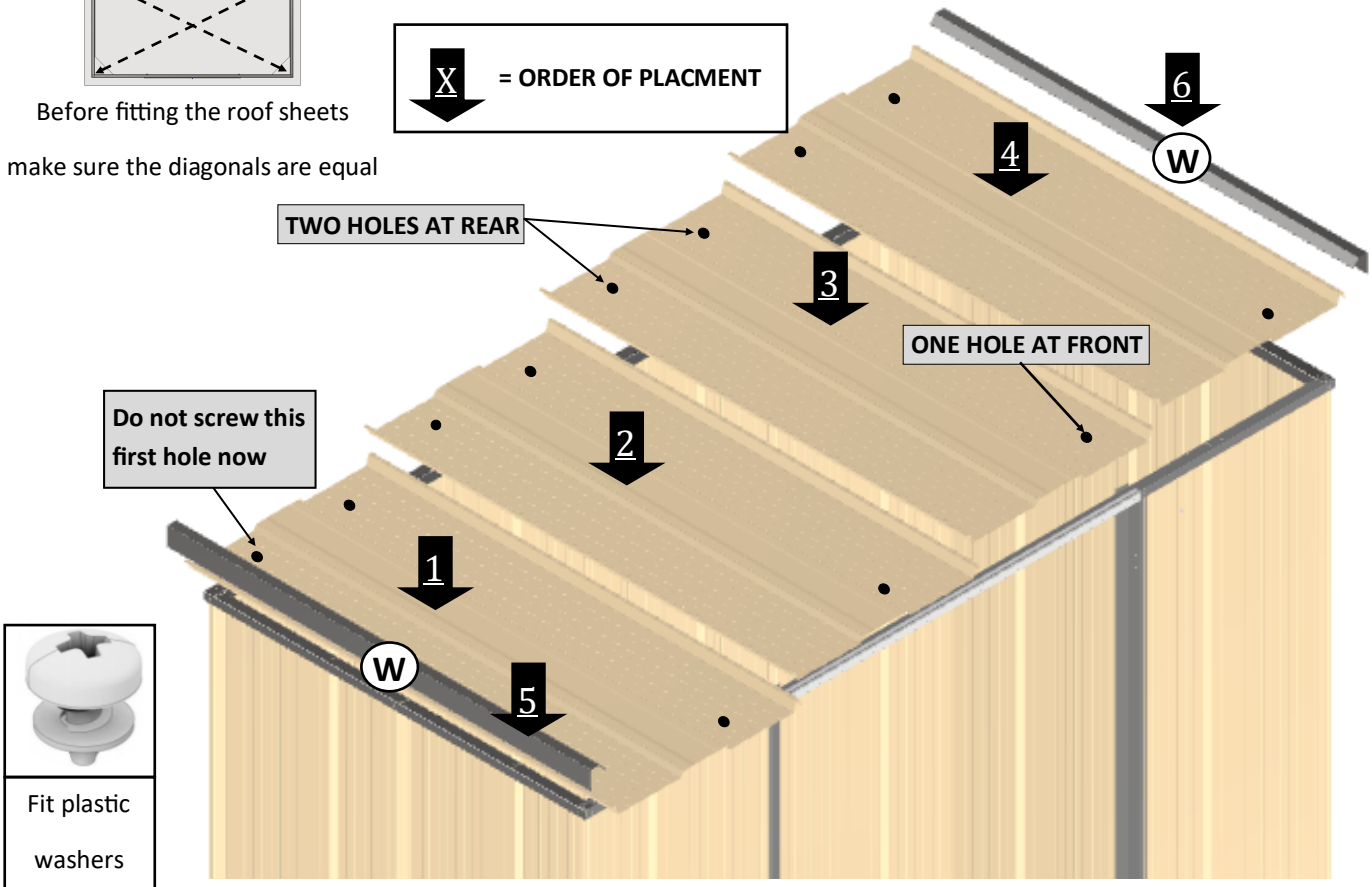

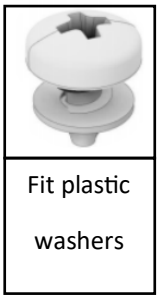

Fit plastic washers

Once the four wall panels are fixed together, the roof Sheets can now be placed one by one as shown to the shed (1 to 8). Be sure to check again that the shed is in square then lift the roof sheets into place and fix with screws as shown below. The holes on the roof sheets align with the “M” channels pilot holes on top of the front and rear wall.

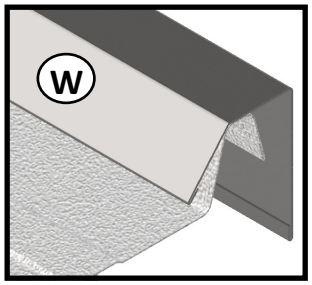

Screw rear side first
Leaving first hole for the last

Pre Drill and screw here at last

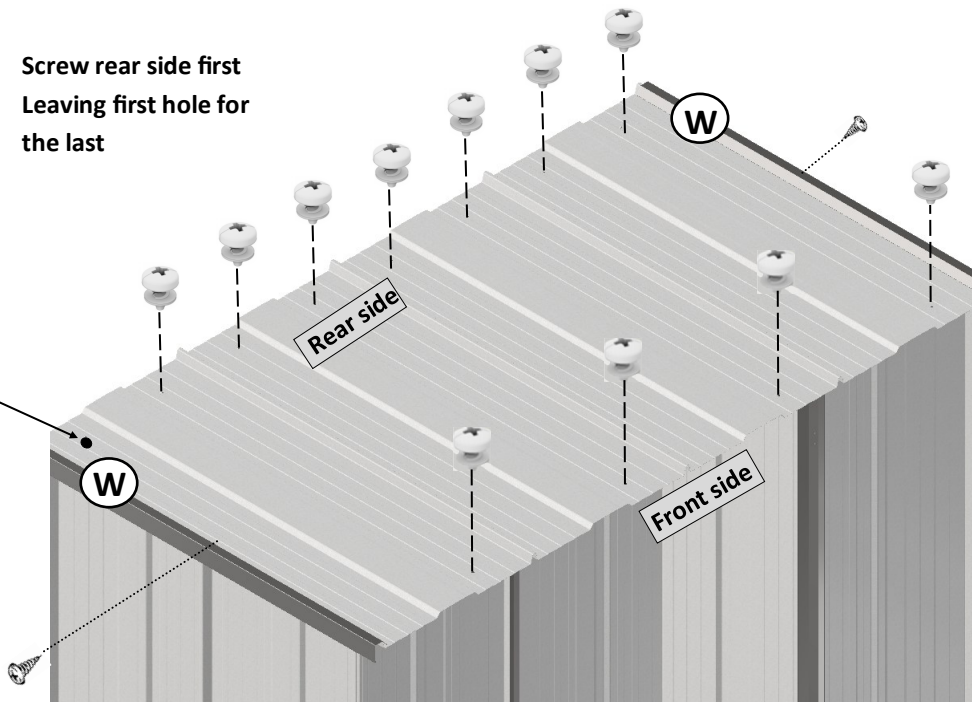

Remove existing screw from the side panels and refix it with side trim “W” on both sides.

ROOF SHEETING & TRIMS

** Showing 4 Panel roof shed, procedure is similar for S53 Sheds.

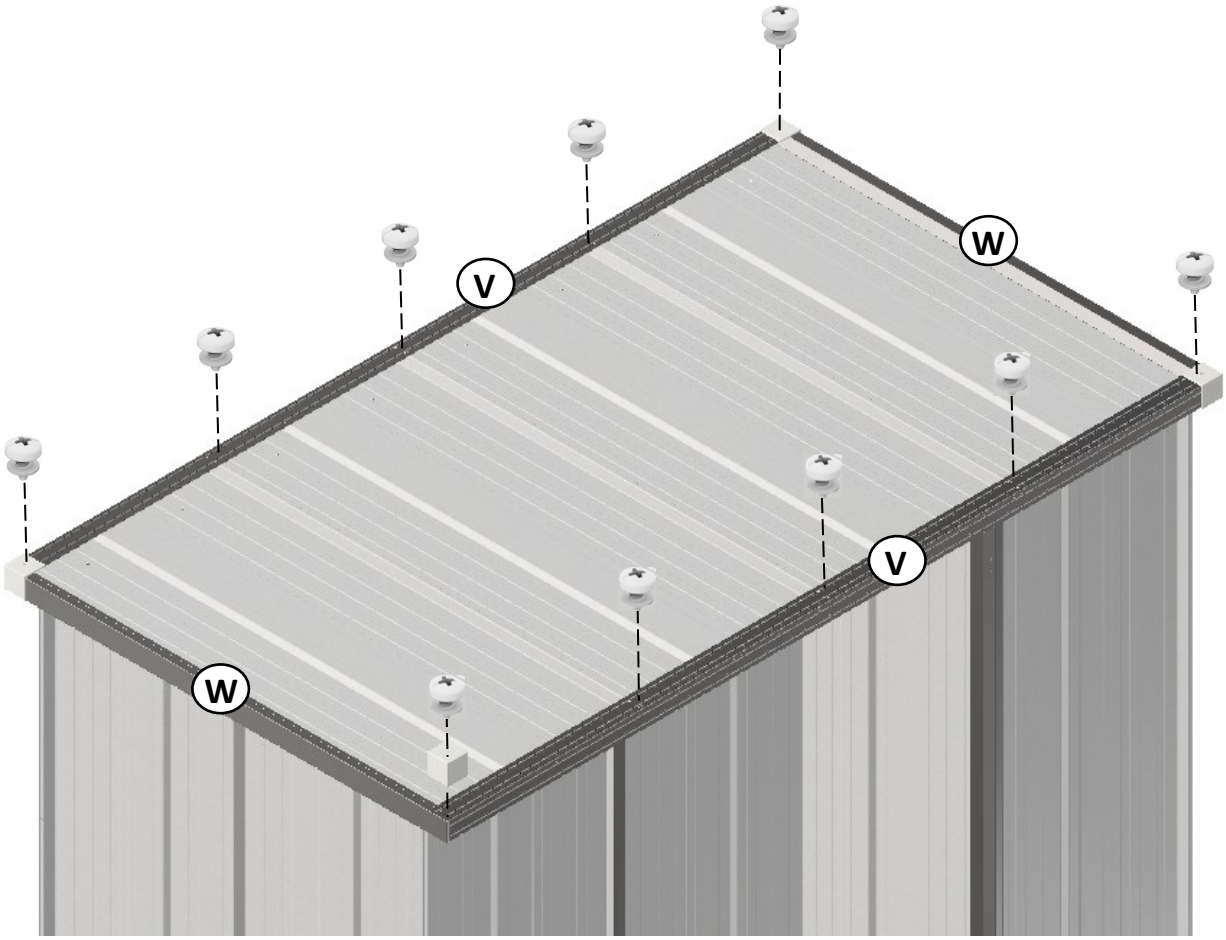

Fix Trim “V” on front and back of the shed. Trim “V” should position on top of Trim “W”. Screw the trim “W” on every rib through pre-punched holes.

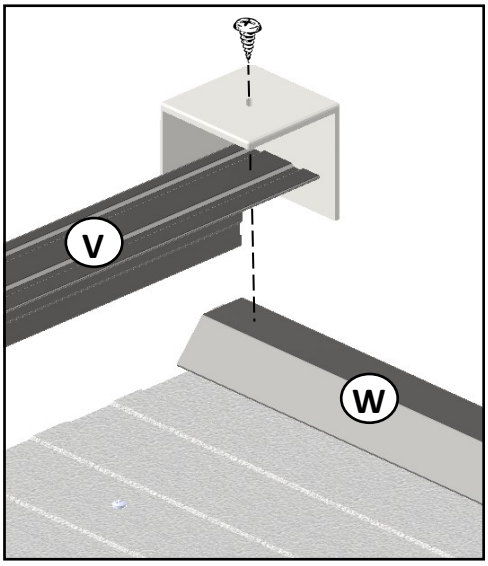

F83-D ASSEMBLY MANUAL

DOOR ASSEMBLY

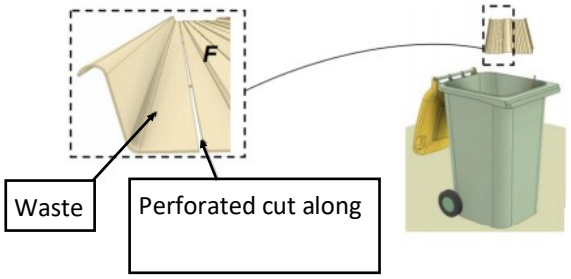

To remove the SMALL lip of the door sheet F, fold back and forth along the perforated pre-cut line. When removed put the waste section into the recycle bin. If too large carefully fold it in half.

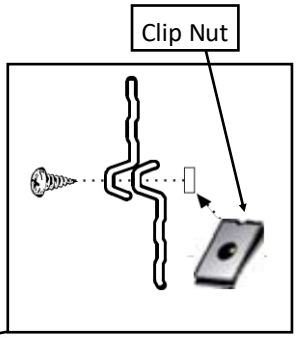

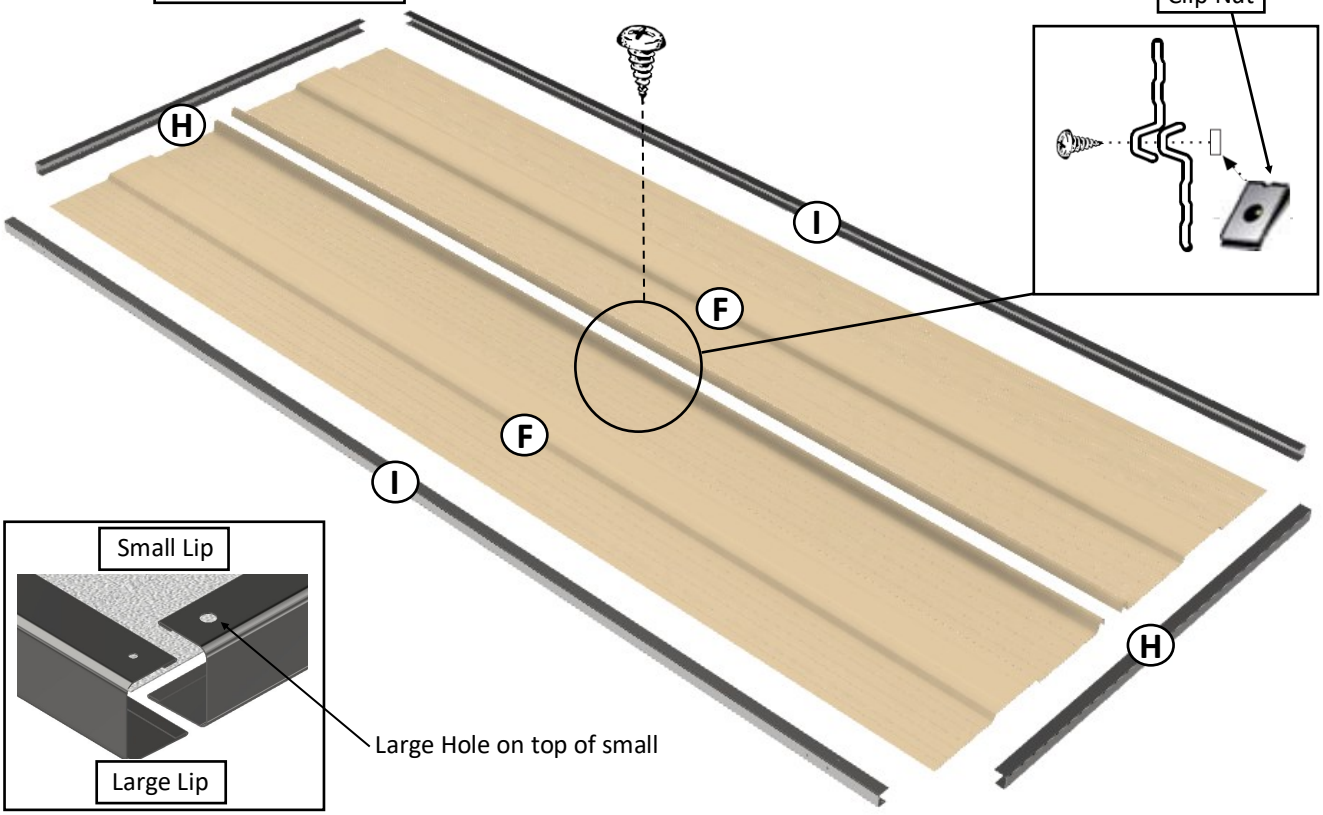

Large Hole on top of small

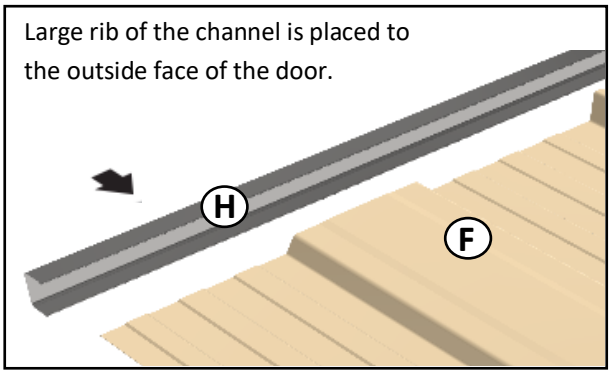

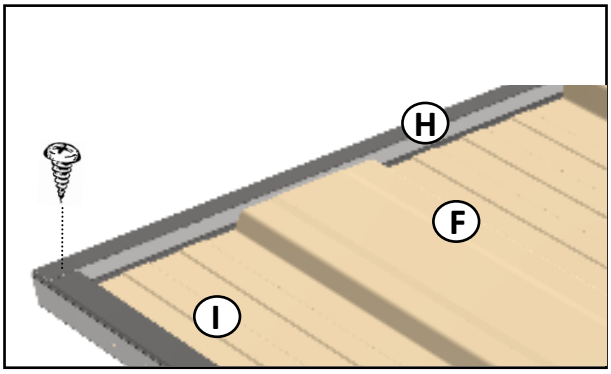

NB: Some channel holes may not align perfectly when the sheets are laid out. They can be easily manipulated into position and screw to the channel.

NB: 2 Door Panels required for this shed.

F83-D ASSEMBLY MANUAL

DOOR ASSEMBLY

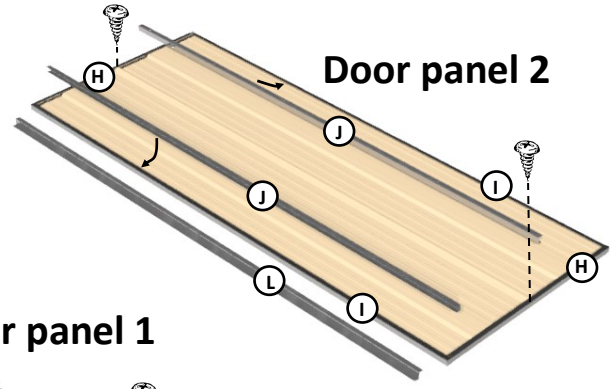

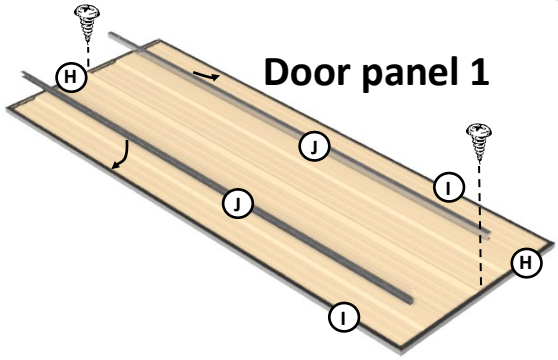

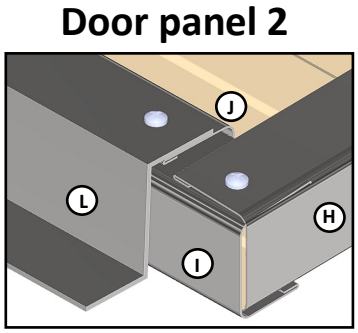

Fix the frame "H" to the sheeting with screws through the small channel lips into the large sheeting ribs. Door boxing must be fitted to the door frames and a door seal fitted on the second door. The seal fits over the top of door frame and the boxing "J".

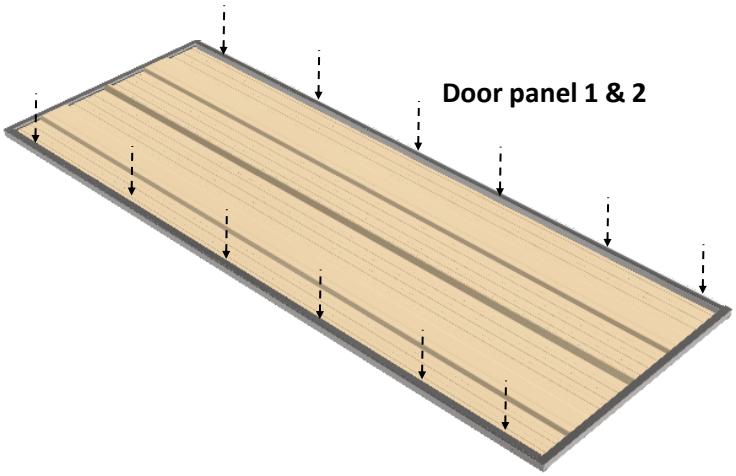

Leave an even gap at both ends of the boxing.

Place large lip of J over the small lip of I as shown

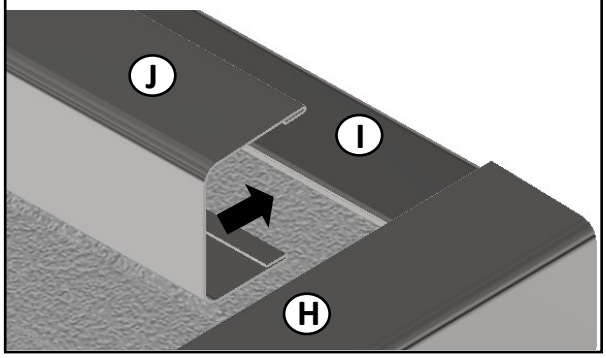

Fix both door boxing in place using six (6) screws.

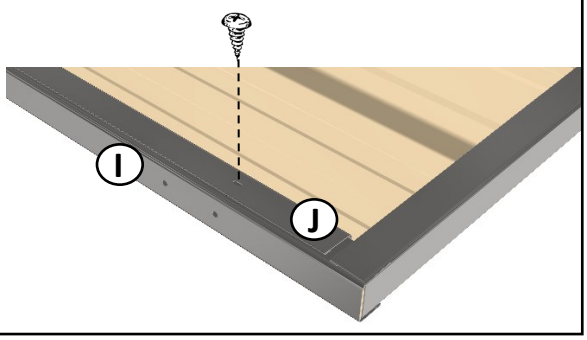

F83-D ASSEMBLY MANUAL

DOOR ASSEMBLY

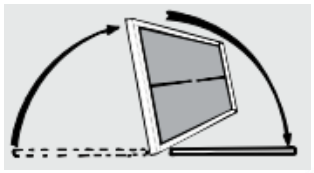

Flip the door assembly over and fix with screws evenly spaced as shown below. Door bracing will also need to be fitted to the door to ensure sturdiness

Door panel 1 & 2 Similar

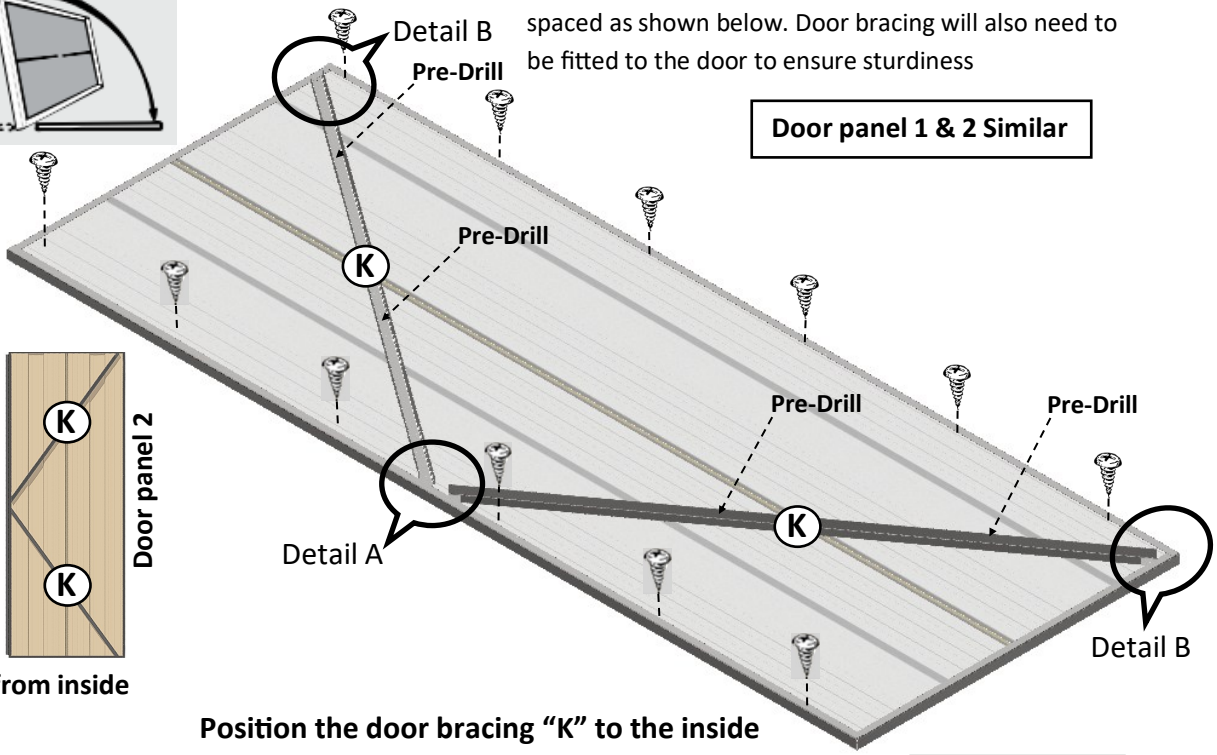

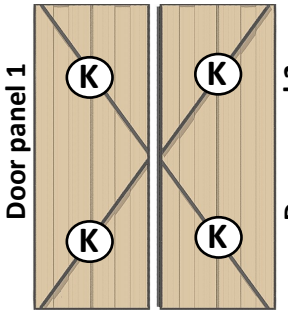

Looking from inside

Position the door bracing "K" to the inside faces as shown on both doors then pre-drill through the bracing and the sheeting.

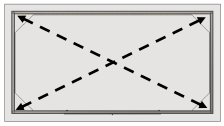

"MAKE SURE THE DIAGONAL

Detail A

Drill pilot holes for door bracing center joint.

Channel K fixed with screws from the front of the door panels.

Refer next page for details

Detail B

Drill pilot holes for door bracing top joint and fix with self tapping screw. N.B. Channel K brace only narrowly tucks under channels. Take care to drill through channel K with pilot hole.

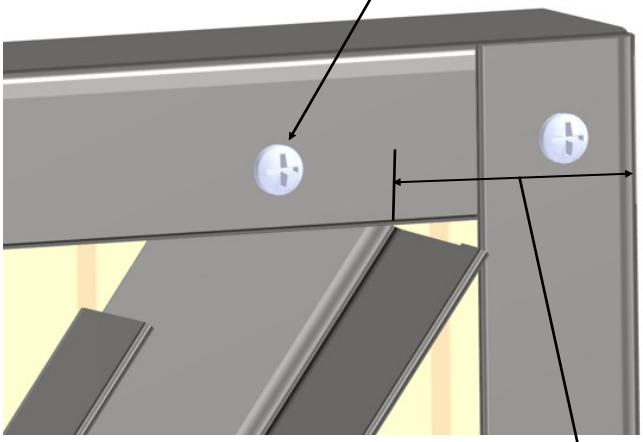

50mm typical at top and bottom door brace as well

F83-D ASSEMBLY MANUAL

DOOR ASSEMBLY

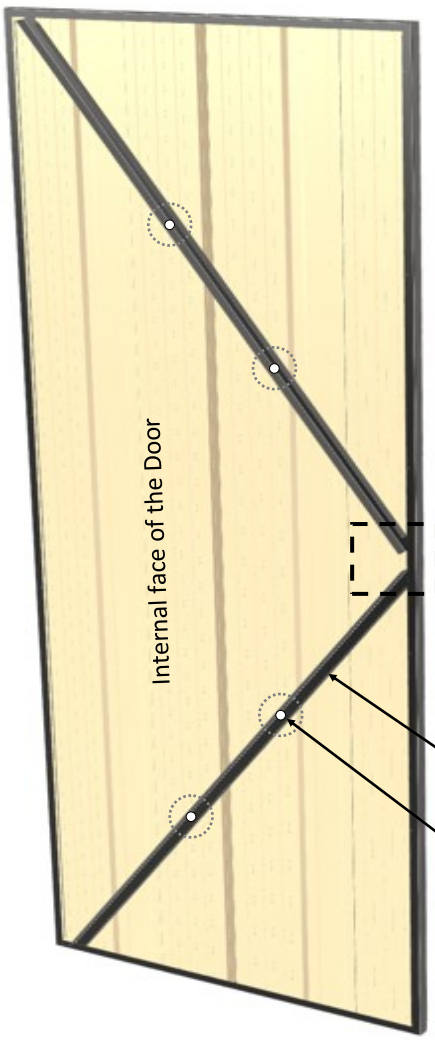

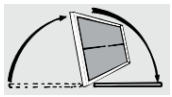

After pre-drill the bracing channels from the inside of the shed Flip the door assembly over and fix the bracing with screws from the

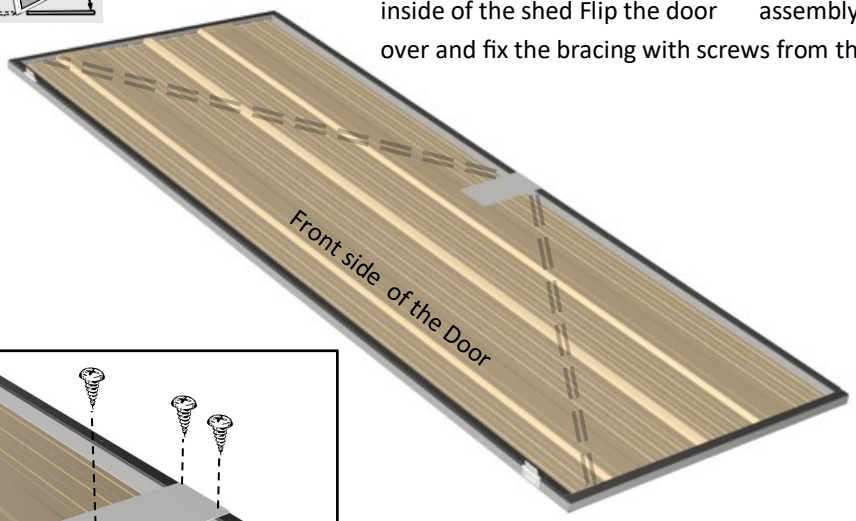

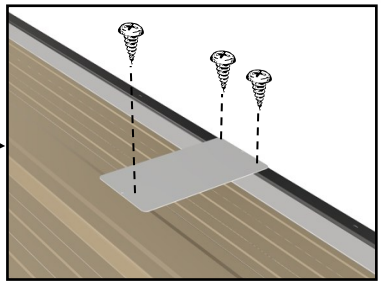

Channel K shown on inside

With the holes drilled through channel K on the inside face of the door, screw fixes the channel K to the inside door face. Screw heads from outside face of door

Screw fix the hinge to the side channel

I through punched holes. Typical top and bottom

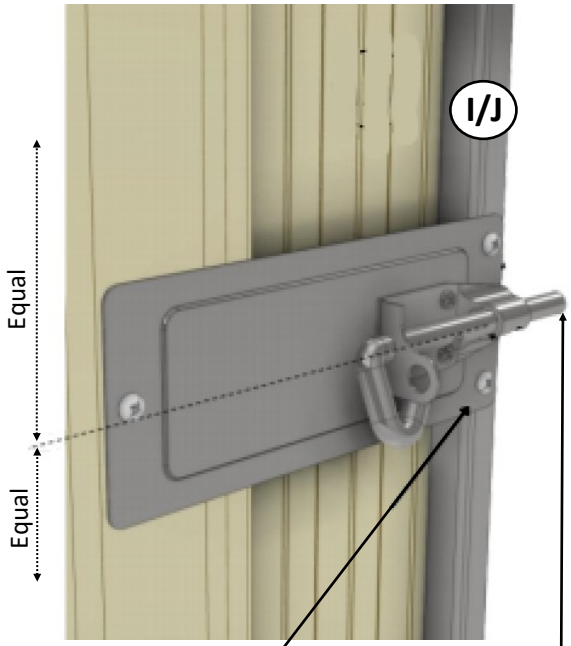

Position the door plate at the center point, using the door plate as a guide to drill pilot holes through channels I / J and door sheeting. Ensure the end of the plate does not protrude past the door jambs I / J.

Position the pad bolt level and screw fix the pad bolt to the door plate with the screws supplied. Fix the padbolt onto door 1 only (without the door seal attached).

F83-D ASSEMBLY MANUAL

DOOR FITTING

Roof Removed in the picture for clarity

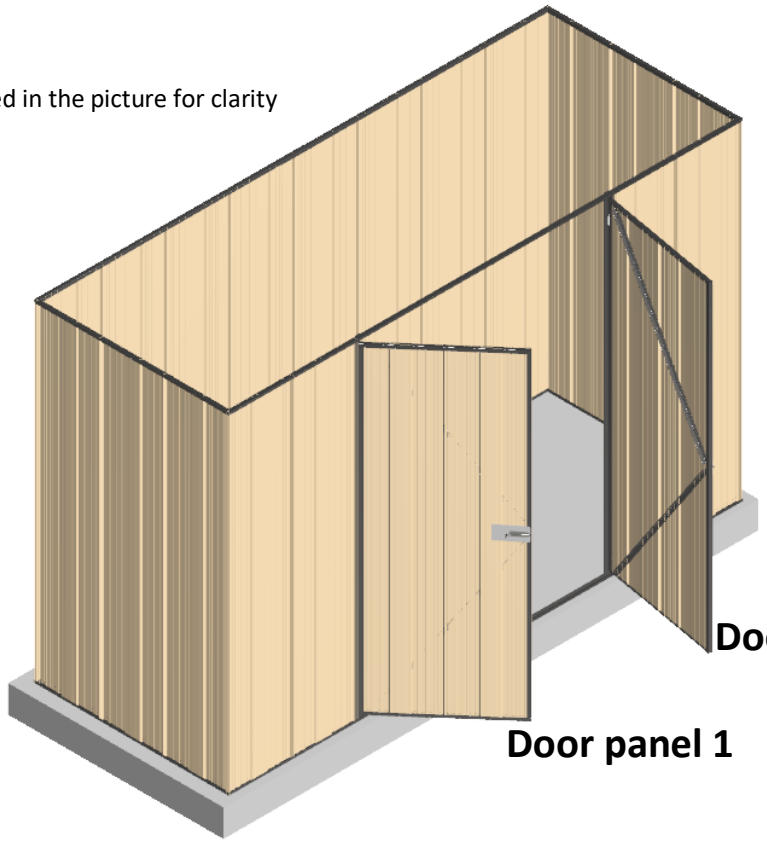

Fit the door to the left or right by fixing the hinges to the pre-drilled holes in the door jambs then fit the padbolt keeper.

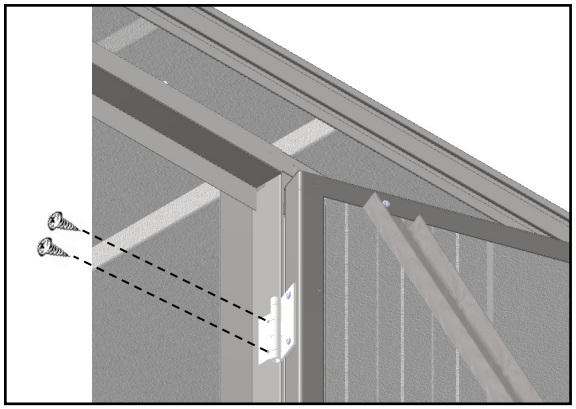

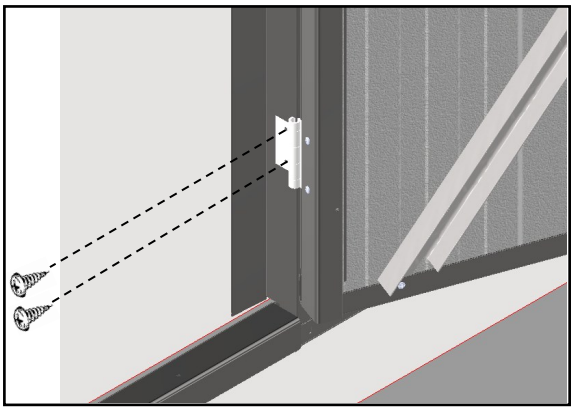

Fit the padbolt and keeper

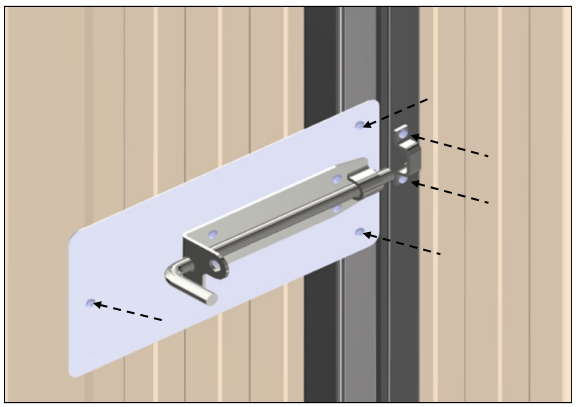

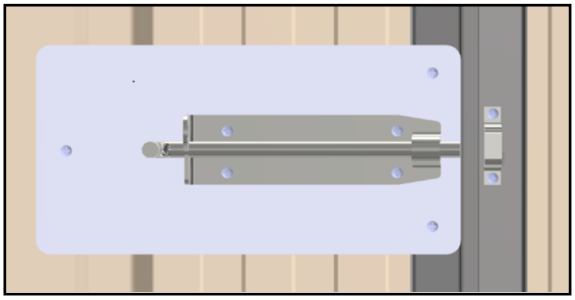

F83-D ASSEMBLY MANUAL

ANCHORING SHED TO SLAB

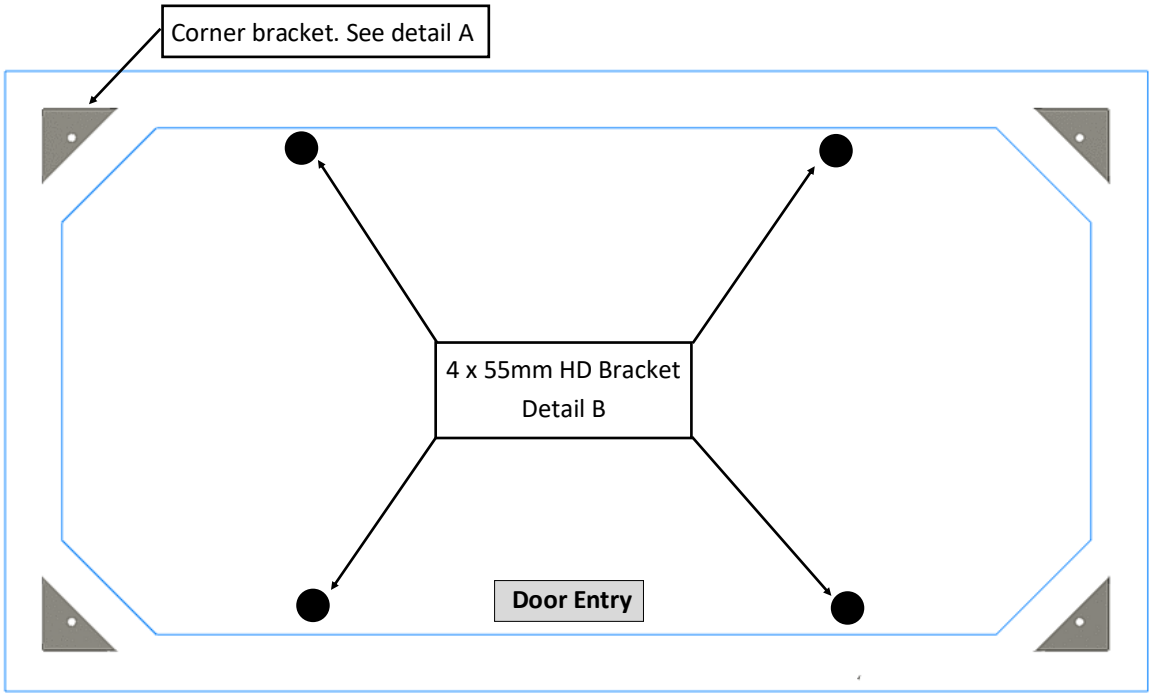

BRACKET FIXING TO SLAB LAYOUT

DETAIL A

Screw fixing corner bracket to wall bottom channels

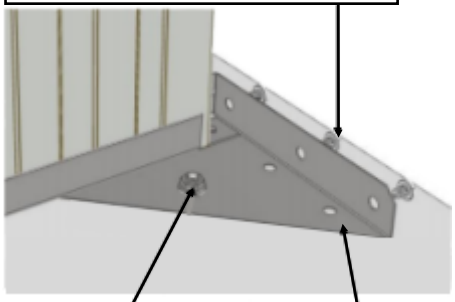

Masonry Anchor

Corner bracket

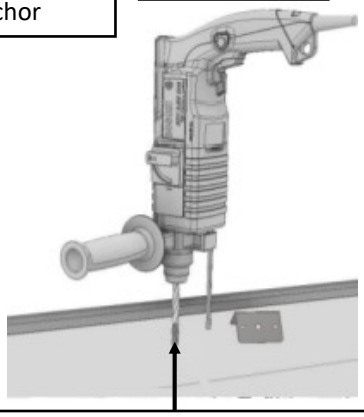

Drill to a depth of 50mm for a M8 Masonry Anchor

Extract all the dust after drilling Drill size = 10mm

DETAIL B

DETAIL FROM INSIDE

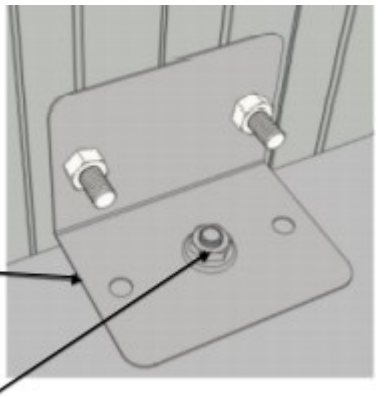

55mm HD Bracket

Masonry Anchor

Drill 5mm hole through the panels and 55mm brackets to the panels using nuts and bolts.

Ensure the bolt heads are to the bottom of the wall pan.

DETAIL FROM OUTSIDE

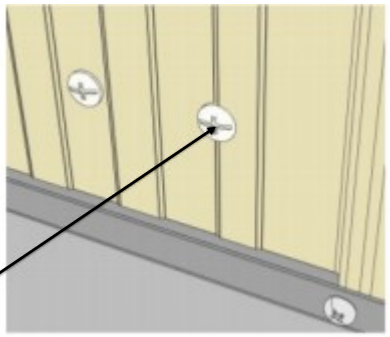

STRONG, QUICK & EASY

CARE AND MAINTENANCE (15 YEARS WARRANTY)

Thank you for purchasing the FASTTRAK® system steel garden shed.

Your personal warranty is backed by Steel Sheds Australia, the manufacturer of FASTTRAK® system garden sheds, and our proven commitment to quality and customer service. Our goods come with guarantees that cannot be excluded under Australian consumer law. You are entitled to a replacement or refund of a major failure and compensation for any reasonably foreseeable loss or damage. You are also entitled to have the goods repaired or replaced if the goods fail to be of acceptable quality and the failure does not amount to a major failure. Cost of claiming the warranty will be by the claimant. This warranty is in addition to other rights and remedies of the customer under law.

Eligibility

1. The 15-year warranty is eligible only to the original purchaser/owner of the shed as registered within 60 days from the date of purchase and is not transferable.
2. The warranty is valid for Australia.
3. The warranty is subject to location and local environmental conditions outlined in the warranty exclusions below.

What is covered under the warranty?

FASTTRAK® steel garden shed 15-year warranty is limited to the following specific cover.

1. Zinc and/or galvanized panel materials will not rust.
2. Colored panel materials will not rust, flake, peel, or blister.

Please note the 15-year warranty does not apply to any accessory items such as fasteners, hasp, pad bolts, also including flooring kits, shelving, hook sets, tool racks, etc.

Warranty Qualifications & Limitations

The FASTTRAK® 15-year warranty is subject to the following qualifications and limitations

1. Warranty does not apply to surface deterioration of the panels caused specifically by a. ”Swarf" (tiny particles of steel debris left from cutting, grinding, or drilling operations) that have not been dutifully removed during the assembly construction process. b. As a result of contact with damp soil, chemicals, fertilizers, or other corrosive substances.
2. Warranty does not cover damage caused by storms, wind, rain, hail, snow, or any other adverse environmental event or ”act of god”.
3. Warranty only applies if the shed is used solely for domestic purposes and installation is in accordance and compliance with the FASTTRAK® instruction manual and manufacturer recommendations.
4. Warranty does not apply if the shed is installed/located in a. Ocean/surf locations (typically defined as within 1km from coastal or tidal locations), b. Severe industrial locations c. Unusually corrosive environments (e.g. Geothermal / Sulphuric conditions)
5. Warranty does not cover any damage as a result of a. Any impact b. Due to poor foundations c. Modifications d. The build-up of debris on or in roof or walls e. Poor assembly and/or construction.
6. The warranty will be void if the shed has been relocated from its original location/address.
7. The warranty is limited to the replacement and delivery of panels and specifically excludes any labour, installation, or removal/disposal costs.
8. Warranty applies to the exclusions of all other representations, guarantees, or warranties, either expressed or implied unless otherwise required by applicable legislation.
9. Your warranty registration certificate and supporting documentation must be completed and lodged within 60 days of he date of purchase.

Warranty Claims

All warranty claims should be made in writing sent directly to:

Steel Sheds Australia, PO Box 1581, Browns Plains, Queensland, 4118

Claims must include:

1. Original proof of purchase documentation.
2. Relevant contact information.
3. Product model.
4. Photographic evidence.
5. Description of the damage.

STRONG, QUICK & EASY

CARE AND MAINTENANCE (15 YEARS WARRANTY)

OWNERS DETAILS	
Owners Name:	
Street Address:	
City:	
Post Code:	
Email Address:	
BUILDING DETAILS	
Product Model Number:	
Colour:	
Place of Purchase:	
Purchase Date:	

Please attach here photocopy of proof of purchase. Retain the original for your records.

You must submit your warranty registration certificate within 60 days of the purchase date of your FASTTRAK® garden shed. Email / Post your certificate and supporting documentation to:

https://spanbiltdirect.com.au/warranty-registration

OR

Steel Sheds Australia
PO Box 1581.
Browns Plains,
Queensland,
4118

NOTE

NOTE

FASTTRAK

STRONG, QUICK & EASY

Enquiries

07 3827 8000

Building Advice Line 1800 032 077

Email: info@steelshedsaustralia.com.au